Artificial Intelligence for Engineering Design, Analysis and Manufacturing

www.cambridge.org/aie

Review Article

Cite this article: Pan Y, Kang S, Kong L, Wu J, Yang Y and Zuo H (2025). Remaining useful life prediction methods of equipment components based on deep learning for sustainable manufacturing: a literature review. *Artificial Intelligence for Engineering Design, Analysis and Manufacturing*, **39**, e4, 1–17
https://doi.org/10.1017/S0890060424000271

Received: 26 December 2023
Revised: 01 September 2024
Accepted: 31 October 2024

Keywords:
remaining useful life; PHM; equipment components; deep learning; sustainable manufacturing

Corresponding authors:
Linggang Kong and Jiaju Wu;
Emails: konglg123456@163.com; wujj@caep.cn

© China Academy of Engineering Physics Institute of Computer Application, 2025. Published by Cambridge University Press. This is an Open Access article, distributed under the terms of the Creative Commons Attribution licence (http://creativecommons.org/licenses/by/4.0), which permits unrestricted re-use, distribution and reproduction, provided the original article is properly cited.

Remaining useful life prediction methods of equipment components based on deep learning for sustainable manufacturing: a literature review

Yao Pan[1], Shijia Kang[1], Linggang Kong[1], Jiaju Wu[1,2], Yonghui Yang[1] and Hongfu Zuo[2]

[1]Institute of Computer Application, China Academy of Engineering Physics, Mianyang, China and [2]College of Civil Aviation, Nanjing University of Aeronautics and Astronautics, Nanjing, China

Abstract

The operational reliability of large mechanical equipment is typically influenced by the functional effectiveness of key components. Consequently, prompt repair before their failure is necessary to ensure the dependability of mechanical equipment. The prognostic and health management (PHM) technology could track the system's health state and timely detect faults. Therefore, the remaining useful life (RUL) prediction as one of the key components of PHM is rather important. Accurate RUL prediction results could be the data support for condition-based equipment maintenance plans. Also, it could increase the dependability and safety of mechanical equipment while reducing the loss of human and financial resources and meet the requirements of sustainable manufacturing in the Industry 4.0 era. However, with the widespread use of deep learning in the field of intelligent manufacturing, there is a lack of review on RUL prediction based on deep learning. In this paper, different deep learning-based RUL prediction methods for mechanical components are summarized and classified, along with their pros and cons. Then, the case study on the C-MAPSS dataset is mainly conducted and different methods are compared. And finally, the difficulties and future directions of the RUL prediction in practical scenarios are discussed.

Introduction

The maintenance of equipment components runs through the entire life cycle of the equipment and is the foundation for ensuring its reliable operation. Equipment support and maintenance have gone through three stages of development, from initial "post maintenance" (maintenance after failure), to mid-term "preventive maintenance" (regular maintenance), and now to predictive maintenance (PdM; maintenance before failure) (Lei et al., 2018). Obviously, maintaining after a malfunction occurs is the most passive way. Due to the inability to respond to sudden malfunctions in a timely manner, maintenance cycles and repair costs are too high, sometimes even threatening human life and property safety. Preventive maintenance requires arranging excess spare parts and idle workers for regular maintenance in advance, which leads to unreasonable allocation of resources and excessive maintenance of equipment. With the introduction of prognostic and health management (PHM) technology, PdM has received increasing attention (Zhao et al., 2021). This technology can manage the health status of equipment components through sensor data, intelligent algorithms, and models, and then perform equipment maintenance based on the health status (Banerjee et al., 2022; Wu et al., 2022b). Among them, remaining useful life (RUL) prediction is one of the key components of PHM technology (Wu et al., 2021a; Li et al., 2023a), and it is also the data basis and support for PdM (Chang and Hsu, 2023). The RUL of equipment components is generally defined as the time difference between the current operating time and the complete shutdown or failure of the equipment due to component failure (Rezamand et al., 2020). RUL is a conditional random variable that varies over time, the surrounding environment of equipment operation, and operating conditions, as shown in Eq. (1).

$$RUL = \{T - t | T > t, M(t)\}. \tag{1}$$

Among them, $T - t$ represents the RUL of equipment components, T represents the failure time of equipment operation, t represents the start time of equipment operation, and $M(t)$ represents all status information of equipment operation within the $T - t$ time interval, such as operating conditions, operating environment, external pressure, temperature, and humidity. In the process of daily equipment maintenance and support, if the RUL of equipment components can be predicted, corresponding PdM and condition-based maintenance plans can be provided,

Downloaded from https://www.cambridge.org/core. 26 Jul 2025 at 05:18:54, subject to the Cambridge Core terms of use.

reducing excessive or untimely maintenance, and ensuring the safe, reliable, and sustainable operation of equipment. At the same time, it will also reduce unnecessary resource consumption in previous preventive maintenance (Wu et al., 2022a), in line with the national action plan of "Made in China 2025."

With the arrival of the Industry 4.0 era, the high-quality development of equipment intelligent manufacturing has become a top priority, and researching the RUL prediction of intelligent equipment is the foundation of serving intelligent manufacturing. Due to the increasingly complex system and component mechanisms of large-scale equipment, it is becoming increasingly difficult to achieve precise mathematical modeling of complex physical equipment systems. Deep learning models, with their powerful model-fitting ability, can fit the degradation process of equipment entities in complex systems and ever-changing working environments, providing a more flexible, practical, and intelligent way to construct equipment degradation models (Ranasinghe et al., 2022). The RUL prediction method based on deep learning only requires monitoring the sensor data of the degradation process of the equipment entity model, and then establishing and training an effective deep neural network model to predict the RUL. Based on the RUL prediction results, equipment maintenance plans can be arranged according to the actual situation (Wang et al., 2020). It can ensure equipment reliability, prevent sudden downtime risks, allocate resources reasonably, save manpower, material resources, and financial resources, and ensure the safety of personnel. The equipment RUL prediction method based on deep learning has changed the inherent development, production, use, and support modes of equipment. For equipment developers, achieving fault diagnosis and RUL intelligent prediction and design closed-loop is crucial. This process cannot only continuously improve the quality of equipment but also achieve intelligent analysis and decision-making through state monitoring and prediction, providing users with more reliable and intelligent equipment services. For equipment users, RUL prediction can improve equipment reliability and safety, reduce support and maintenance costs, and achieve refined equipment management through rapid deployment, immediate response, and continuous support (Angadi and Jackson, 2022; Ochella et al., 2022). This intelligent analysis and decision-making cannot only improve the reliability and stability of equipment but also provide comprehensive support for data management and decision-making during equipment operation, and provide more comprehensive and efficient public services for equipment operation. Therefore, promoting the intelligent research of RUL prediction based on deep learning in the field of equipment support is a necessary path.

At present, RUL prediction methods for mechanical equipment can be divided into three main categories, which, respectively, are model-based methods, data-driven methods, and hybrid model-based methods (Ochella et al., 2022). Model-based RUL prediction methods for components require accurate mathematical and theoretical modeling of complex systems. It requires accurate expression of the components' degradation mechanism, which is difficult to achieve for large and complex mechanical equipment (Ge et al., 2021). The data received during the operation of mechanical equipment is becoming more and more accessible due to the ongoing development of sensor technology and the intelligence of mechanical equipment. Data-driven RUL prediction methods use the data obtained from sensors to predict the RUL in combination with relevant data processing techniques. The data-driven strategy does not require prior expertise in expert systems or knowledge of the mechanism and process of component deterioration but only requires the analysis and processing of the collected data to perform RUL prediction by mining the information features implied in the data and building the corresponding prediction models (Yin et al., 2022), which has gained the attention of many researchers. Among them, data-driven RUL prediction methods include three major categories: initial statistical learning methods, shallow machine learning methods, and deep learning methods (Ferreira and Gonçalves, 2022). Statistical learning methods require sufficient prior knowledge to build statistical models. Traditional machine learning models have poor fitting ability to nonlinear models, while deep learning models have more powerful model representation ability and feature extraction ability for nonlinear systems, which have attracted a wide range of scholars to conduct research studies in recent years (Rauf et al., 2022). The term "hybrid model approach" describes the complete fusion of different prediction techniques, such as model–model fusion, model–data fusion, data–data fusion, and data–digital twin (DT) fusion, to address the shortcomings of a single model. Which model to select and how to combine different models are the primary areas of research for hybrid methods.

In summary, as the systems and component mechanisms of large-scale equipment become increasingly complex, traditional model-based methods are becoming increasingly difficult to apply to practical industrial environments. In recent years, RUL prediction models based on deep learning have strong model fitting capabilities, which can be unrestricted by complex equipment mechanisms or not solely rely on expert experience (Ochella et al., 2022). Therefore, significant achievements have been made in related research, including but not limited to new theoretical explorations, technological innovations, and practical solutions to real-world problems. These achievements have attracted widespread attention and recognition in both academia and industry and have had a positive impact on the development and application of this field (Xu et al., 2021a).

However, there is a lack of summary and comparison of relevant research work and results based on deep learning. At the beginning of RUL prediction research based on deep learning, we assumed that there is a complete equipment (running to failure) dataset, and the goal of the study is to apply basic deep learning methods to these datasets with good prediction accuracy. Although these deep learning methods perform better and better on the aforementioned datasets, they cannot be applied in practical scenarios. Due to the complexity and variability of real-world scenarios, it is considerably difficult to have a complete and simple dataset for deep learning models to learn. Based on this, researchers have proposed many methods to solve these challenging problems in practical scenarios. In a word, basic methods are only the first step in applying deep learning to RUL prediction, and only by truly solving the challenging problems in practical scenarios can the above methods be put into practice. Therefore, in order to master and further understand the RUL prediction methods and technology based on deep learning, this paper summarizes the research and application of deep learning models in equipment RUL prediction in recent years, and summarizes and classifies them as shown in Figure 1, which include single basic method, combined methods, and some special and useful issues to solve the challenging problems.

In this paper, some basic deep learning methods used for RUL prediction are discussed in the "Deep learning-based RUL prediction methods" section. Several significant solutions to address the corresponding issues of RUL prediction are summarized by comparing the research directions highlighted in various literature in the "Methods to solve challenging problems in RUL predictions" section. Then, a case study and method comparison for turbofan

Downloaded from https://www.cambridge.org/core. 26 Jul 2025 at 05:18:54, subject to the Cambridge Core terms of use.

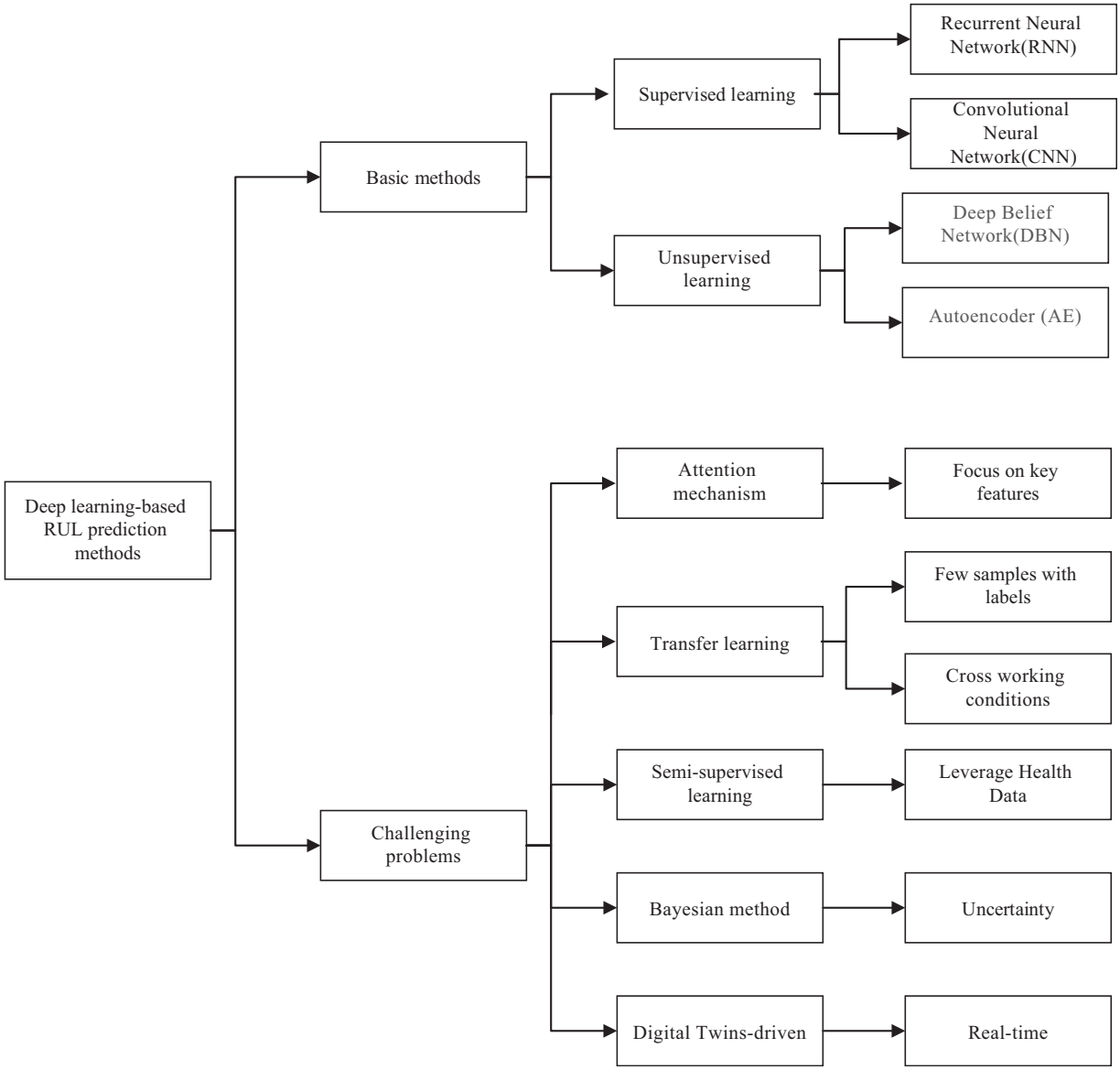

Figure 1. Deep learning-based remaining useful life prediction methods for equipment components.

engines are discussed in the "Case study" section. Finally, based on the summary of the deep learning-based RUL prediction research and methods, the pros and cons of different methods are categorized, and the challenges and development trends of RUL prediction methods for equipment components are proposed in the "Conclusions" section. Especially, the equipment components investigated in this paper and the corresponding datasets are shown in Table 1, which include bearings (Liao et al., 2016; Hu et al., 2019; Zhao et al., 2020; Cao et al., 2021; Ding et al., 2022; Zhu et al., 2022), turbofan engines, and lithium batteries (Lin and Li, 2022; Wang et al., 2022a; Zhu et al., 2022).

In conclusion, our contributions can be outlined as follows.

1) We comprehensively summarize the commonly used deep learning methods to predict the equipment components RUL, as well as the new techniques to address the real-world application issues, including DTs, transfer learning (TL) techniques, and Bayesian techniques.
2) We conduct the case study on the C-MAPSS dataset and compare different RUL prediction methods on the dataset.
3) We compare the pros and cons of different deep learning methods and discuss the difficulties and some future directions about the RUL prediction in practical scenarios, which could promote the early practical application of deep learning methods.

Deep learning-based RUL prediction methods

This section reviews the principles and applications of the basic deep learning methods commonly used for components' RUL prediction. Most of the literature studies the improvement of RUL prediction accuracy by using a single method or combined methods.

Recurrent neural network

Recurrent neural network (RNN) was first studied in 1980 as a network for processing sequential data. And then with the deepening and progress of theory and computing power, it became a kind of deep learning algorithm in the early 2000s and was

Downloaded from https://www.cambridge.org/core. 26 Jul 2025 at 05:18:54, subject to the Cambridge Core terms of use.

Table 1. Equipment components and the corresponding datasets

Equipment components	Datasets
Bearings	FEMTO-ST bearing dataset (PHM 2012) (Guo et al., 2017; Chen et al., 2021; Lu et al., 2021; Wu et al., 2021b; Cheng et al., 2022; Man et al., 2022), XJTU-SY bearing dataset (Guo et al., 2017; Xia et al., 2021; Cheng et al., 2022; Pan et al., 2022), Rocket Engine Ni–Cu–Ag bearing dataset (Pan et al., 2022)
Turbofan engines	Turbofan dataset from NASA C-MAPSS (PHM 2008) (Yu-hui et al., n.d.; Li et al., 2018; Che et al., 2019; Chen et al., 2019; Ellefsen et al., 2019; Al-Dulaimi et al., 2020; Gao, 2020; Li et al., 2020b; Sayah et al., 2021; Xiong et al., 2021; Xu et al., 2021c; Al-Khazraji et al., 2022; Chadha et al., 2022; Fan et al., 2022; He et al., 2022a; Krokotsch et al., 2022; Li et al., 2022b; Remadna et al., 2022; Yuan et al., 2022; Zhang et al., 2022; Zheng et al., 2022; Jiangyan et al., 2024), Newly issued N-CMAPSS dataset (Li et al., 2022b)
Lithium batteries	Lithium battery dataset from CALCE of the University of Maryland (Wu et al., 2022a), Graphite/$LiCoO_2$ battery dataset (Yu et al., 2020), Lithium battery dataset from NASA (Liang et al., n.d.; Wang et al., 2022b)

continuously used in the field of natural language processing (NLP), such as text generation, machine translation, and semantic recognition. The core of RNN is the existence of a memory function, which can remember the previous sequence of the current sequence and thus obtain the relationship between data at different moments. The health status of equipment components is constantly degraded over time, so the data monitored by the sensors are the time-series data that can be processed by RNN. Guo et al. (2017) used RNN to predict the RUL of bearings, and a better prediction performance was obtained. However, RNN suffers from severe gradient disappearance problems and cannot capture long-time dependence during gradient descent backpropagation. Therefore, the literature on the prediction of component RUL using RNN alone has been almost unretrieved in recent years.

Long short-term memory (LSTM) network is a special kind of RNN, mainly to solve the gradient disappearance problem during the training of long sequences; the structure is shown in Figure 2.

As can be seen from Figure 2, the LSTM structure has three controlled gates, which are called the forget gate, the input gate, and the output gate. The forget gate processes the information of h_{t-1} and x_t through the sigmoid cell to determine how much information is retained by the cell state C_{t-1}, as shown in Eq. (2):

$$f_t = \sigma\left(W_f \cdot [h_{t-1}, x_t] + b_f\right). \tag{2}$$

The input gate processes the information of h_{t-1} and x_t through the sigmoid unit to determine how much information to update. The updated information is obtained by processing the information of h_{t-1} and x_t by the tanh unit, as shown in Eqs. (3) and (4):

$$i_t = \sigma(W_i \cdot [h_{t-1}, x_t] + b_i), \tag{3}$$

$$\tilde{C}_t = \tanh(W_C \cdot [h_{t-1}, x_t] + b_C). \tag{4}$$

Then the cell state C_{t-1} is updated to C_t according to the input gate and forget gate, as shown in Eq. (5):

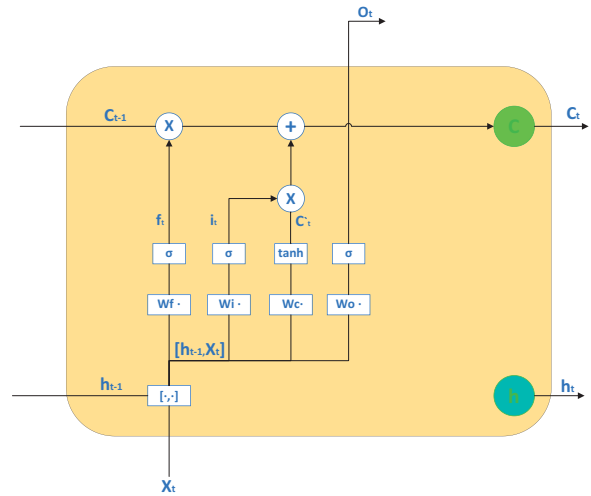

Figure 2. Single-layer structure of long short-term memory.

$$C_t = f_t * C_{t-1} + i_t * \tilde{C}_t. \tag{5}$$

Finally, the h_t is determined according to C_t, the output gate h_{t-1}, and x_t, as shown in Eqs. (6) and (7):

$$o_t = \sigma(W_o \cdot [h_{t-1}, x_t] + b_o), \tag{6}$$

$$h_t = o_t * \tanh(C_t). \tag{7},$$

where * represents the Hadamard product, h_t is passed to the next layer, and the above operation is continued. Compared with RNN, the cell state C_t is added to make the memory time series data longer. By stacking LSTM units, the multilayer LSTM networks are constructed to mine the time-series information inside the data and predict the RUL. Gao (2020) proposed a deep learning model based on the LSTM algorithm and feedforward neural network to achieve high prediction accuracy on the C-MAPSS dataset; Sayah et al. (2021) developed a framework for testing the robustness of deep LSTM networks to ensure the confidence and quality of the training model, and the effectiveness of the framework is validated on the C-MAPSS dataset.

Compared with RNNs, LSTMs have made great progress in prediction performance and are widely used in the research literature. To further improve the ability of LSTM to predict RUL, variants such as bi-directional LSTM (Bi-LSTM), gated recurrent unit (GRU), and bi-directional GRU (Bi-GRU) have also been increasingly applied to the component's RUL prediction. Yu et al. (2020) proposed a Bi-LSTM-based network model averaging method to predict the RUL of graphite/$LiCoO_2$ batteries and got improved prediction accuracy. Chen et al. (2019) first performed feature selection by the kernel principle component analysis method to address the problem of excessive parameters due to redundancy of sensor data features, and then fed the features into the GRU network to predict the RUL of the turbofan engine. Al-Dulaimi et al. (2020) applied Bi-GRU to the C-MAPSS dataset as part of the hybrid framework and obtained a higher accuracy for the turbofan engine's RUL.

Convolutional neural network

Convolutional neural network (CNN) was developed based on the concept of perceptual wilderness proposed in the 1960s and

Downloaded from https://www.cambridge.org/core. 26 Jul 2025 at 05:18:54, subject to the Cambridge Core terms of use.

formally introduced by Yann LeCun of New York University in 1988. Compared with other network structures, the most important feature of CNN is the addition of convolutional and pooling layers. The purpose of convolution is to extract the deeper features of the input, and the pooling layer after the convolution layer is used to compress the amount of data and parameters. The mathematical expression of convolution once and the simple structure diagram are shown in Eq. (8):

$$y_c = f_c(x \cdot k_c + b), \tag{8}$$

where f_c represents the activation function, x represents the input, $\cdot$ represents the convolution operation, k_c represents the convolution kernel, and b represents the bias. The most important feature of CNN is the use of local connectivity and weight sharing, which on the one hand reduces the number of weights making the network easy to train and optimize, and on the other hand, reduces the complexity of the network model and reduces the risk of model overfitting to some extent.

In the field of RUL prediction for equipment components, CNNs have been used in many studies for their powerful feature extraction capability. A single deep CNN (DCNN) structure or the CNN as a feature extractor for other methods is often chosen in the literature to improve the prediction accuracy of RUL. Li et al. (2018) used DCNN to mine the high-dimensional depth features of the C-MAPSS dataset to obtain more accurate RUL prediction values. Ma and Mao (2020) added the idea of convolution operation in CNN to the LSTMs, and proposed a new convolutional LSTM (CLSTM) network, which can capture both temporal frequency information and learn temporal information, and achieved higher prediction accuracy compared with DCNN. Liang et al. (n.d.) used the CNN as a feature extractor for lithium battery degradation data, and the features associated with lithium battery degradation were extracted, and then used the Bi-LSTM to integrate the temporal features and predict the RUL.

One-dimensional CNN (1D-CNN) is a network dedicated to time series. Distinct from CNNs applied to image processing, the convolution kernel of 1D-CNN is one-dimensional. Compared with models such as RNN and LSTM, the training convergence of 1D-CNN is faster. In recent years, it is promising to obtain RUL predicting results in the field of equipment components that are not inferior to those of LSTM. Man et al. (2022) first used a generative adversarial network for data augmentation, and then the augmented data were trained adversarially using 1D-CNN, achieving smaller mean absolute deviations and mean square root errors for prediction results. Zheng et al. (2022) used 1D-CNN as part of the fused deep learning model to mine data for temporal features to aid RUL prediction. Wang et al. (2022b) used the 1D-CNN to mine the high-dimensional time-series features within the lithium battery data and obtained more accurate battery health state assessment values. Hong et al. (2021) combined the concepts of Dilated CNN and EfficientNet, and added the dilated kernels in all hidden layers to cover a larger range of the convolutional kernels' perceptual fields, which better captured the deeper features of the signal.

Deep belief network

Deep belief network (DBN) first appeared (Hinton and Salakhutdinov, 2006) published in Science by Geoffrey Hinton, a deep learning guru, for image data compression. In the literature (Hinton and Salakhutdinov, 2006), it is pointed out that DBN consists of a multilayer stacked restricted Boltzmann machine (RBM), which is essentially a constructed special neural network. RBM contains two layers of neurons: the visible layer (visible variables) and the hidden layer (hidden variables). The visible layer is used for data input and is also called the input layer; the hidden layer is used for mining the implicit features of the input data, so it is also called the feature extractor. RBM is a probabilistic undirected graph model, that is, there are only two states, representing the activated and inactive states. Liao et al. (2016) used the RBM incorporating the regularization item to deeply extract the monitoring information related to failure degradation trends, and then predicted the RUL of bearings based on the similarity method; RBM is often used in the field of components' RUL prediction to extract features and then combines other methods for RUL prediction. In recent years, RBM has appeared less in the papers about RUL, and most of the literature uses stacked RBM (i.e., DBN), and the specific structure of DBN is shown in Figure 3. By stacking the RBMs, the hidden layer of the first RBM is used as the hidden layer of the second RBM, which makes the implicit features extracted by the hidden layer deeper and more representative.

DBN opens the door to deep learning model extensions, which can be used not only for classification problems but also for regression problems and is widely used in various fields such as image processing, NLP, remote sensing classification, and RUL prediction. Hu et al. (2019) toke the DBN as part of a bearing diagnostic model, primarily for mining the deep hidden features behind the monitoring data. Peng et al. (2019) proposed an unsupervised health index (HI) construction method, extracted the hidden features corresponding to the system fault states based on DBNs, and constructed HI according to the distance between the degradation and fault states. Che et al. (2019) developed a PHM model based on multiple deep learning algorithms and embedded the DBNs into the model, obtaining low error rates and biases on the turbofan engine dataset. Li et al. (2020b) used the DBN to extract the engine timing information processed by LSTM, built the corresponding degradation HI, and then predicted the RUL based on the degradation curve and threshold. Zhang et al. (2022) proposed a joint training model to visualize the degraded features extracted by DBN, and the joint training guarantees the computational efficiency of the prediction process, which shows great performance on the engine dataset.

Autoencoder

The concept of autoencoder (AE) was first introduced in 1986 by Rumelhart in the literature (Rumelhart et al., 1986). It is a typical unsupervised learning algorithm.AE consists of an encoder and a decoder. In the encoding stage, the encoder maps the input data into a low-dimensional space by encoding and compressing them, whereas in the decoding stage, the decoder achieves unsupervised feature learning by reducing the original input data. Similar to RBM, stacked AE (SAE) can be achieved by stacking multiple layers of AE, and its structure is shown in Figure 4.

Similar to DBN, SAE can mine the deep features of data and has been applied to many practical aspects of life. These applications make AE a broader development prospect. Al-Khazraji et al. (2022) made full use of the unsupervised feature extraction capability of AE and used the extracted features from AE as the input of DBN, achieving a lower root mean square error (RMSE) for the RUL prediction of the engine dataset. Wu et al. (2021b) proposed a prediction model for different degradation stages, and embedded AE into the model, obtaining higher RUL prediction accuracy on Hilbert transformed bearing signals. Nguyen et al. (2022) used a pre-training and fine-tuning SAE approach to train the network parameters of the DNN, built degenerate HI from the original data,

Downloaded from https://www.cambridge.org/core. 26 Jul 2025 at 05:18:54, subject to the Cambridge Core terms of use.

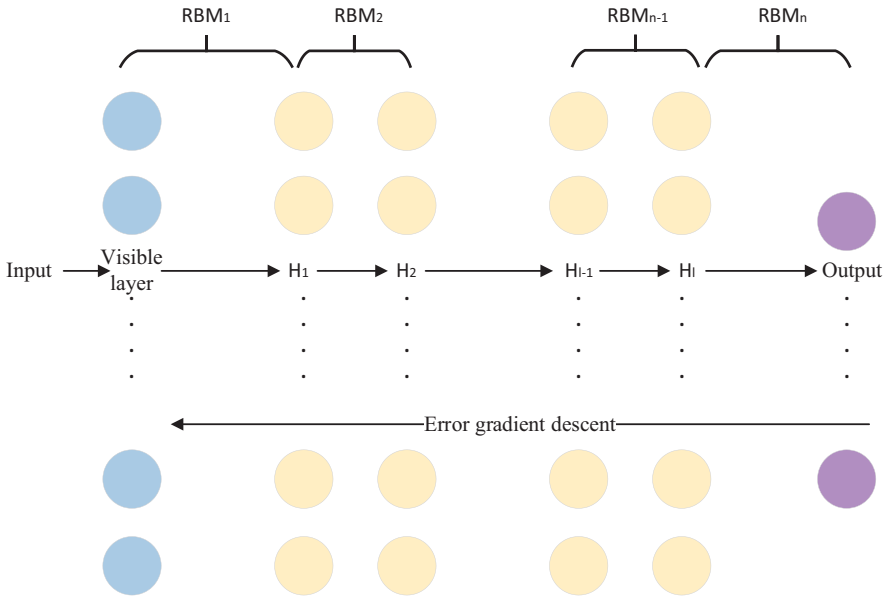

Figure 3. Network structure of deep belief network.

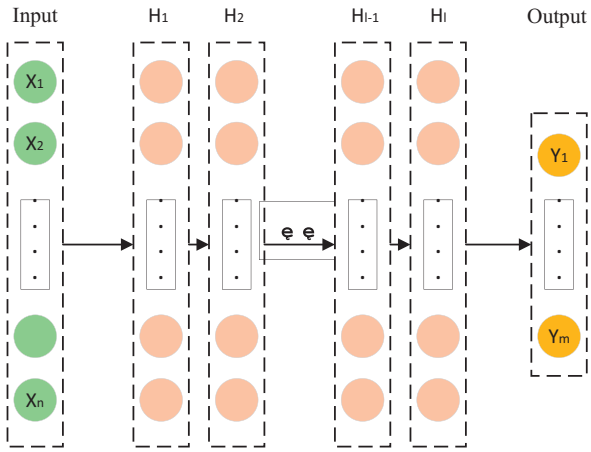

Figure 4. Structure of stacked autoencoder.

and then predicted the RUL by computing the Kullback–Leibler divergence with the labeled samples. Chen et al. (2021) used a deep convolutional AE based on quadratic functions to solve the problem that the prior knowledge is required to construct HI. By directly extracting relevant information from the original data to construct HI, they obtained great bearings' RUL prediction. Yu-hui et al. (n.d.) incorporated time scales into the process of extracting HI, and used the AE to extract nonlinear features of the engine, showing good RUL prediction on the C-MAPSS dataset. Lu et al. (2021) proposed a generative adversarial learning framework, and used LSTM as a generator and AE as a discriminator to overcome the problem of superposition of prediction errors in the bearings' RUL prediction process.

Methods to solve challenging problems in RUL predictions

The basic deep learning methods could solve the RUL prediction problem in an ideal state to some extent. However, in practical scenarios, such as insufficient attention to important features, only a few of labeled samples available, cross-working conditions, uncertainty in RUL prediction results, and real-time prediction, it becomes difficult to accurately predict RUL only using the basic methods in the "Deep learning-based RUL prediction methods" section. Therefore, this section reviews the useful techniques to address the issues in actual scenarios.

Attention mechanism

The concept of attention mechanism (AM) was first proposed in the field of computer vision, and in 2014 Google Mind added AM to RNN models for image classification in the literature (Mnih et al., 2014), making AM widely popular in the academic community. Since then, AM has been widely used in computer vision, NLP, machine translation, and other fields. In the last 2 years, some literature has also used AM for RUL prediction. AM mimics the attention allocation effect of human observation, and its core idea is to shift attention from global to focused regions. In deep neural networks with a large number of model parameters, AM cannot only save computational resources and allocate them to more important features but also focus on the key information of the input and reduce the attention to other redundant information. In summary, AM is usually embedded as a module in the deep neural network model, as shown in Figure 5. In addition to the conventional AM, some variants have also emerged, which are the soft/hard AM, key–value pair AM, and multi-head self-AM (i.e., Transformer) (Vaswani, 2017).

(Yuan et al., 2022) used the AM for feature extraction, which weighted multiple features of the original data, helping the RUL prediction model focus on important features and improving prediction performance. Remadna et al. (2022) added the AM to the deep convolutional variational AE to make full use of the feature processing capability of AM. It assigned higher weights to important information in the encoding stage while providing a low-dimensional representation of the features, which increases the explainability of the model. Fan et al. (2022) proposed a new AM framework that can save computational overhead while selecting information relevant to the task of predicting RUL. The information extracted by AM is then fed to the fully convolutional network to predict the engines' RUL. Zhao et al. (2020) implement soft thresholding of signal features with the help of AM. They

Downloaded from https://www.cambridge.org/core. 26 Jul 2025 at 05:18:54, subject to the Cambridge Core terms of use.

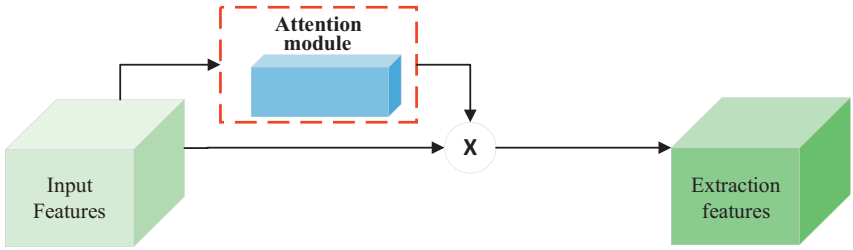

Figure 5. Diagram of the attention module.

constructed a network to learn the optimal selection of thresholding and then combined it with a deep residual network to predict the bearings' RUL. Chadha et al. (2022) added AM as a layer to the Transformer framework to identify feature patterns that degrade with RUL by segmenting the time domain features of individual sensor data and then fused these patterns to predict the engines' RUL. Wang et al. (2022a) placed the AM layer behind the Bi-LSTM network structure for capturing the feature information most relevant to the RUL degradation, and gave greater weights to the captured information sequences to assist the Lithium batteries' RUL online prediction. Jiangyan et al. (2024) combined the local modeling ability of CNN and the global modeling ability of Transformer to improve the overall architecture of the RUL prediction model.

Transfer learning

The concept of TL first appeared in the pre-conference workshop of Neural Information Processing Systems (NIPS-95) in 1995. In 2009, Sinno Jialin Pan and Qiang Yang classified TL into three major categories based on the data labeling of the source and target domains, namely inductive TL, transductive TL, and unsupervised TL, as shown in Figure 6.

For the equipment components' RUL prediction problem, most of the literature uses the transductive TL based on domain adaptive. Define the source domain D_s and the source task f_s, and the target domain D_T and the target task f_T. Usually, we have a sufficient amount of labeled samples in the source domain, that is, $D_s = \{X_s, y_s\}^{N_s}$, where $X_s = \{x_1, x_2, x_3 \ldots x_n\}$ denotes the feature space of the source domain samples, $X_T \sim P(X_T)$ represents the data distribution of source domain, y_s denotes the corresponding RUL labels, and N_s denotes the number of samples in the source domain. For the target domain $D_T = \{X_T\}^{N_T}$, that is, the dataset to predict the RUL, $X_T = \{x_1, x_2, x_3 \ldots x_n\}$ denotes the feature space of the target domain samples, $X_T \sim P(X_T)$ denotes the data distribution of the target domain, N_T denotes the number of samples in the target domain, and D_T contains only a small number of labeled samples, most of them or all of them have no RUL labels and need to rely on TL to obtain y_T. The goal of TL is to use the knowledge in the source domain D_s and the source task f_s to serve and help the learning of the target prediction function f in D_T, that is, $y_T \approx f(X_T)$, in case $D_s \neq D_T$ or $f_s \neq f_T$.

Domain adaptive methods in TL can be divided into three types: reconstruction methods (Ghifary et al., 2016), discrepancy-based methods (Du et al., 2021), and adversarial methods (Ganin et al., 2016). The reconstruction method tries to reconstruct data with more differentiated and common features (Bousmalis et al., 2016); the discrepancy-based method measures the difference between the source and target domains by statistical metrics, and the commonly used numerical scales are the maximum mean discrepancy and the maximum density divergence (MDD) (Li et al., 2020a); the adversarial method trains discriminators and feature extractors in an adversarial manner to reduce the gap between the source and target domain (Li et al., 2021).

Generally, TL is used as an embedded technique, on the basis of the deep learning method mentioned in the "Deep learning-based RUL prediction methods" section, to address mainly the problems of few labeled samples and cross-condition problems in the field of RUL prediction.

Few labeled samples

Although industrial Internet of Things (IoT) and sensor technologies have been widely used, in the actual industrial production

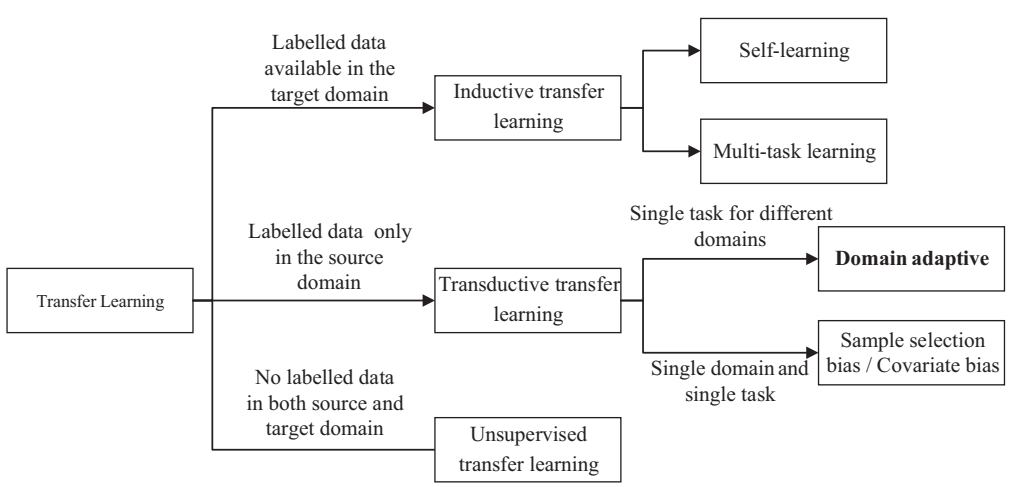

Figure 6. Transfer learning classification.

Downloaded from https://www.cambridge.org/core. 26 Jul 2025 at 05:18:54, subject to the Cambridge Core terms of use.

process, the available samples are few at the early stage of equipment operation, especially the labeled data that can be used for deep learning model training. Based on this, the following literature selects TL to solve the problem of a few labeled samples in the target domain while choosing basic deep learning networks. Li et al. (2022b) used the C-MAPSS and N-CMAPSS datasets to adjust the distribution of source and target domains at the feature and semantic levels, and migrate knowledge from labeled source domains (N-CMAPSS) to unlabeled (C-MAPSS) target domains, while allowing the model to be extended for online tasks. Xia et al. (2021) proposed a new fault information-assisted CLSTM network for different failure modes of bearings, which transferred the failure modes in the source domain (CWRU bearing dataset mainly for fault diagnosis) to the target domain (XJTU-SY bearing dataset) to assist the RUL prediction. Zeng et al. (2021) first trained the source domain in the offline phase to fully learn the feature space to solve the problem of a small number of samples of rolling bearing parts labels. Then the target domain training in the online phase is fine-tuned to obtain high RUL prediction accuracy even in the case of few labeled samples in the target domain. Pan et al. (2022) compensated the lack of run-to-failure data for Ni–Cu–Ag bearings by combining a branching AM and the branching CNN. They migrated knowledge from the XJTU-SY bearing dataset with labels to rocket motors, which retained the retention of local features and global degradation information. Cheng et al. (2022) proposed a two-stage RUL prediction method for cross-domain datasets by combining two-by-two on the bearing datasets. By using a two-way transfer AM, the problem of insufficient labeling of the target domain data is compensated, while the migration capability and model stability are improved.

All the abovementioned literature is based on two different datasets, with the labeled dataset as the source domain and the unlabeled one as the target domain, thus implementing transfer knowledge between different datasets.

Cross-condition problem

On the other hand, because the operating conditions of equipment components are complex and variable, there will be different operating conditions in the single dataset. To address the problem of the poor generalization ability of deep learning models trained under a single operating condition, TL can also apply domain adaptive methods to migrate the knowledge in the source domain (operating condition 1) to the target domain (operating condition 2) to solve the problem of RUL prediction for cross-operating-condition components. Fu (2021) added the feature space difference minimizing metric between the source and target domains to the loss function, which effectively solves the problem of different data distribution between different working conditions. Cao et al. (2021) realized the adaptive identification of different operating states and working conditions of bearings, and then migrated the deep learning model to reduce the distribution differences between different working conditions and achieved a more accurate bearings' cross-working-condition RUL prediction. Ding et al. (2022) proposed a multi-source domain adaptive network to transform the vibration signal into a time–frequency signal, which enables a more powerful generalization capability of the target domain through feature extraction in the multi-source domain, and achieved a high accuracy RUL prediction of bearings across working conditions. Li et al. (2023b) proposed a partial domain adaptation method for RUL prediction with incomplete target-domain data, which is well suited for practical cross-domain RUL predictions.

In summary, in the field of RUL prediction of equipment components, TL, as an embedded conditioning method, combines the use of various deep network architectures and methods, mainly solving the problems of a few samples with labels in practical applications and components' cross-working conditions. To improve the generalizability of deep learning models, TL research will be pursued in depth in the future, addressing issues such as the best way to quantify the difference between the source and target domains.

Semi-supervised learning

Equipment RUL prediction belongs to regression problems, and conventional methods generally require sufficient labeled RUL information in the training set, which is known as supervised learning, such as RNNs and CNNs, which can mine the feature information affecting labeled RUL and predict unknown RUL; on the other hand, unsupervised deep learning introduces an initial pre-training phase to extract features related to the degradation from the original unlabeled training data, such as RBM and AE. They can automatically extract deep high-dimensional information by coding and decoding from the original unlabeled training data. Therefore, even in the case of a few labeled training data, the combination of unsupervised and supervised learning, that is, semi-supervised learning can also provide accurate RUL prediction results.

In actual industrial production, to ensure the proper operation of equipment, equipment parts are usually replaced before their failure, so the sensors collect a large amount of pseudo-failed hover data. And semi-supervised learning can make full use of these pseudo-failed hovering data to extract information related to degradation from them. He et al. (2022a) considered not only the failed labeled data but also the hovering unlabeled data in the process of actual industrial production when extracting fault information, which improves the robustness and generalization capability of the RUL prediction model. Krokotsch et al. (2022) proposed an improved semi-supervised learning framework for the lack of available data for the whole life cycle of equipment components. They used a self-supervised learning approach to extract valid knowledge from the failure-labeled data and pseudo-failed unlabeled data, where pseudo-labels are generated for model training. Ellefsen et al. (2019) used semi-supervised learning to pre-train the framework and used the genetic algorithm to obtain the optimal hyperparameters. Their results showed that the prediction results of semi-supervised learning outperform those of supervised learning. Nieves Avendano et al. (2022) leveraged structure learning and pseudo-label (Lee, 2013). They added the pseudo-labels to a large amount of unlabeled data by classifier iterations and at the same time built the monotonic HIs. Then these HIs were used in the enhanced RUL prediction model.

In summary, pseudo-hovering unlabeled data from the real manufacturing process can be fully utilized by semi-supervised learning. By pre-training or using self-supervised techniques to add pseudo-labels to the hovering data, the relevant feature space and training set can be increased. Also, if the hovering unlabeled data include a variety of operating or failure conditions, TL techniques can also be used to solve the cross-domain issue.

Bayesian neural networks

The performance degradation of equipment components under different operating environments and scenarios will exhibit a certain degree of uncertainty, including aleatoric (data) uncertainty and epistemic (model) uncertainty, as shown in Figure 7. Aleatoric uncertainty refers to systematic error, chance error, coarse error,

Downloaded from https://www.cambridge.org/core. 26 Jul 2025 at 05:18:54, subject to the Cambridge Core terms of use.

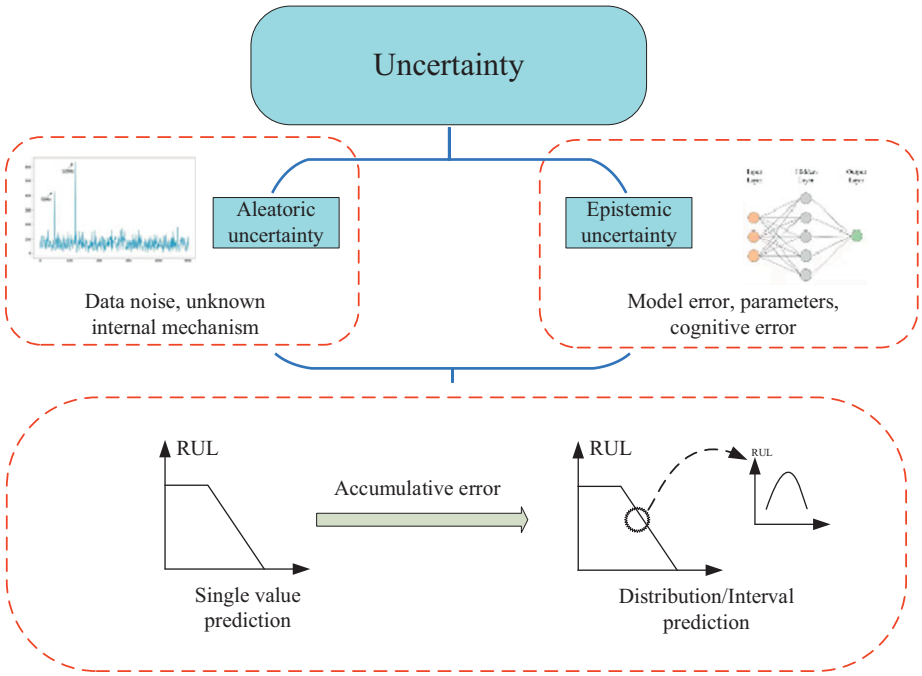

Figure 7. Aleatoric (data) uncertainty and epistemic (model) uncertainty.

and unknown error in the data due to the limitations of observation means and processing algorithms. Epistemic uncertainty refers to the error of prediction methods or models unable to fully simulate the dynamics of real-world systems. Meanwhile, the accumulative error in the process of building deep learning networks for equipment component degradation also leads to the uncertainty of RUL prediction results.

In the actual industrial production process, different systems with different working conditions do not have the same requirements for the risk level of equipment components. Therefore, in the RUL prediction of components, compared with the single-value RUL prediction, uncertainty analysis, and modeling can be performed to obtain the probability distribution or confidence interval of RUL. It cannot only avoid the error generated by single-value prediction to a certain extent but also provide users with more reference value for suggestions and decisions, which is often more practical in practical applications.

Since the standard deep neural network structure produces a deterministic single-value prediction result for a given input and does not have the ability to express uncertainty, Buntine and Hutter (2010) added the Bayesian method to the neural network modeling process and eventually developed the Bayesian neural network method. It makes deep learning feasible for modeling uncertainty and allows neural networks to describe uncertainty factors while having powerful representation capabilities. According to the Bayesian method, the parameters such as weights and biases in the neural network structure can be considered as random variables. The deep learning model that sets the network parameters as random variables is called the deep Bayesian model (deep Gaussian process). The comparison of the structures of conventional artificial neural networks and Bayesian artificial neural network models (deep Gaussian process) is shown in Figure 8.

In the Bayesian neural network structure, the objective function for model training is the likelihood function determined from the sample data, and the posterior probability distribution of the weights and bias parameters are adjusted during the training process. Due to the complexity and difficulty of training deep Bayesian neural network models and the difficulty of converging to the optimal solution, many improved Bayesian methods have been applied in deep neural network research. In previous studies, variational inference (Blei et al., 2017) has been applied to many Bayesian neural network methods for approximation. Gal and Ghahramani (2016) proposed the theory that the conventional neural network structure by adding dropout to each layer and multiple Monte Carlo dropout inference is mathematically equivalent to a deep Gaussian process model (i.e., Bayesian neural network). Therefore, most of the literature approximates the deep Bayesian model by multiple Monte Carlo inferences to achieve uncertainty in RUL prediction. Zhu et al. (2022) set the dropout in the convolutional layer of CNN from the perspective of active learning and obtained the bearings' RUL prediction uncertainty by multiple Monte Carlo dropout inferences. Then they selected labeled samples from the alternative sample pool according to the uncertainty, which reduced the number of training samples under the condition of the same prediction accuracy. Biggio et al. (2021) evaluated a variety of deep Gaussian process scaling and solved the problem that deep Gaussian processes could not scale when there was a very large number of data in the real industries. Meanwhile, their method could provide both accurate RULs and uncertainty estimation. Lin and Li (2022) proposed a new iterative calibration method to address the problem that Bayesian uncertainty prediction methods cannot accurately capture model bias and noise bias. By combining the isotonic regression and standard deviation scaling for metric quantification of uncertainty, they integrated them into the Bayesian deep learning framework. Chen et al. (2022) proposed a framework for using RUL prediction uncertainty to implement component maintenance decisions, which addressed the current problem of separating the study of RUL prediction and maintenance decisions in PHM technology and also was in line with actual industrial processes. Xu et al. (2021c) combined the deep learning method and non-smooth Gaussian process to fully capture the temporal dependence of the raw data, then they predicted the RUL and quantified their uncertainty. By validating the C-MAPSS

Downloaded from https://www.cambridge.org/core. 26 Jul 2025 at 05:18:54, subject to the Cambridge Core terms of use.

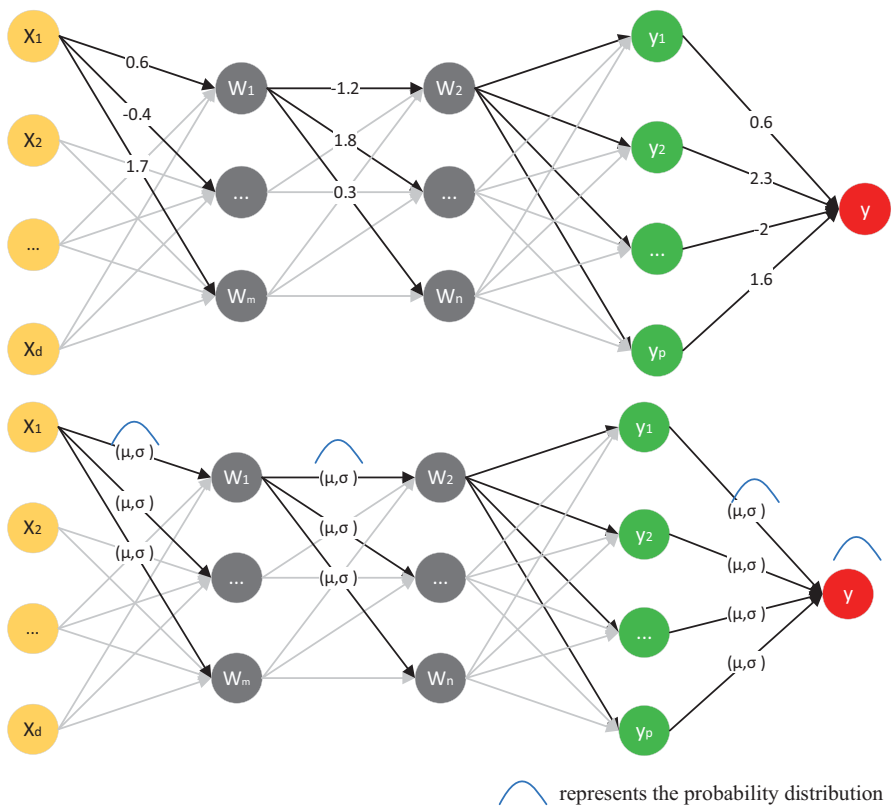

Figure 8. The top represents conventional artificial neural networks, while the bottom represents Bayesian artificial neural networks (deep Gaussian process).

dataset, they got low prediction errors, as well as valid uncertainty intervals.

Digital twin-driven

The concept of DT was first introduced based on the National Aeronautics and Space Administration (NASA) Apollo program in 2003 by Dr. Michael of the University of Michigan. Its name has changed from "mirror space" to "information mirror," and "DT" was first proposed and quoted in 2011. After several years of application and precipitation, DT was named one of the 10 key technologies in 2019. From different perspectives, there are different understandings of DT. Among them, five commonly used interpretations of DT as shown in Table 2.

Table 2. Five-dimensional interpretations of DT

Dimension	Interpretations of DT	Same point
Model	DT is a 3D model or virtual prototype (Alam and El Saddik, 2017; Vassiliev et al., 2019).	Connected the physical and virtual worlds
Management	DT is a type of life cycle management or known as digital shadowing and digital threading.	
Platform	DT is an Internet of Things or industrial internet platform.	
Simulation	DT is an analog simulation.	
Expression	DT is a digital representation or virtual body of a physical entity (Fei et al., 2020).	

However, according to Table 2 regardless of the interpretation and definition, they all share a common feature: it connects the physical and virtual worlds and serves the physical world according to demand. The DT relies on knowledge mechanism, simulation interaction, big data, and other technologies to establish digital models, and uses technologies such as the IoT to map real-time data from the physical space to the DT space. On the above basis, combining artificial intelligence (AI), data mining, edge computing, and other technologies, common applications such as the description of the DT, diagnosis and prediction, intelligent decision making, and maintenance are empowered to various vertical industries such as aerospace satellite, aerospace, oil, and gas industry, environmental protection, architectural design, military science, medical and pharmaceutical, smart city (He et al., 2022b), smart factory (Tao et al., 2020), national grid, equipment security, and other various fields.

Mechanical equipment maintenance from the initial "maintenance after failure" to "preventive regular maintenance," and now "PdM," DT will promote the maintenance of equipment components upgrade, to achieve "accurate condition-based maintenance" (Tao et al., 2018b). The aim is to achieve the goal of collaborative optimization at all levels, ensuring the safe operation of machinery and equipment and minimizing maintenance costs. DT has to combine with other advanced technologies (such as deep learning and complex high-frequency networks) to ensure real-time, high-speed, and low latency, completely break the information silo, and play its great advantage (Tao et al., 2018a). Lv and Xie (2021) proposed that when using DT technology to assist physical entity models to collaborate, precise maintenance and guarantee for faulty physical entity equipment or components are also necessary. The flow chart of DT-driven mechanical equipment maintenance is

Downloaded from https://www.cambridge.org/core. 26 Jul 2025 at 05:18:54, subject to the Cambridge Core terms of use.

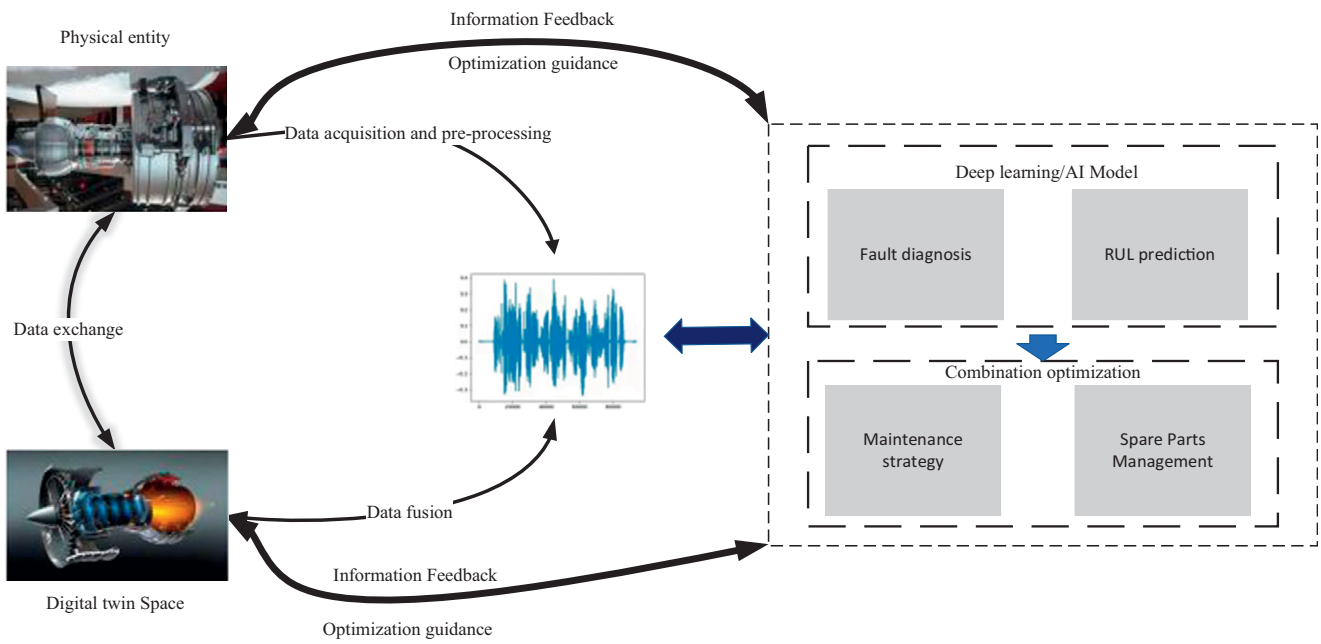

Figure 9. Flow of digital twin-driven mechanical equipment assurance.

shown in Figure 9. Among them, the use of DT combined with AI prediction to improve fault diagnosis and prediction accuracy is a major direction (Li et al., 2022a).

Xiong et al. (2021) proposed that traditional model-based or data-based PdM methods are often reactive and heuristic and cannot diagnose faults and assess potential risks promptly, much less provide safe emergency strategies and guarantees. To this end, they combined DT techniques with deep LSTM neural networks, achieved RUL accurate prediction, and provided complete health management solutions. Wu and Li (2021) built an aero-engine DT model based on IoT and sensor data, where they used LSTM deep networks to dynamically update the DT model to assist the RUL prediction of physical entity models. And then they extended the DT model to remote operation and health maintenance management of equipment components. Anis et al. (2020) a proposed DT framework-based LSTM-ED network for the need for real-time data updates and online learning. And they used the LSTM-ED network to reconstruct the time series of sensor data for real-time RUL prediction and update. Guo et al. (2021) established DT models based on real-time sensor data for real-time RUL prediction, providing digital solutions for accurate maintenance of machinery and equipment, and guiding spare parts inventory optimization.

In summary, DT technology plays a major role in real-time prediction and accurate maintenance of equipment components: from the digital model establishment to physical real-world connection, to real-time model update, real-time fault diagnosis and prediction, real-time inventory optimization, and real-time health monitoring (Hollenbeck and Chen, 2022). In the future, it is necessary to explore effective deep-learning methods for fault diagnosis and RUL prediction. Deep learning methods that can solve the challenges of multiple cross-working conditions, few samples, online learning, and uncertainty are to be developed to embed into the DT model to provide accurate, fast, and real-time maintenance for the operational safety of machinery and equipment.

Case study

C-MAPSS dataset

This part uses the NASA C-MAPSS dataset to compare and summarize the effectiveness of various deep learning methods in predicting RUL. The C-MAPSS dataset is widely used for predicting the RUL of turbofan engines, which simulates the actual degradation process of turbofan engines over flight cycles, from a healthy state to run to failure. The dataset is divided into four different subsets, as shown in Table 3. There are two types of engine failure modes, among which FD001 and FD002 only contain HPC fault mode, while FD003 and FD004 contain HPC and Fan fault mode; The operating conditions are also divided into two types, with FD001 and FD002 only containing a single operating condition, and FD003 and FD004 containing multiple operating conditions. In each subset, the training set, the testing set, and the real RUL labels are provided. Each training and testing set contains 21-dimensional sensor data for monitoring engine operation, as well as 3-dimensional operation setting data. For a more detailed introduction to this dataset, please refer to Saxena and Goebel (2008).

The training data samples and the corresponding RUL label can be used for training the deep learning model. After the model training is completed, the RUL of each turbofan engine can be predicted in the test set, and the predicted results are compared with the actual RUL values provided in the dataset to verify the effectiveness of the prediction model.

Table 3. C-MAPSS dataset description

C-MAPSS	FD001	FD002	FD003	FD004
Engines in training set	100	260	100	249
Engines in test set	100	259	100	248
Operating conditions	1	6	1	6
Fault modes	1	1	2	2

Downloaded from https://www.cambridge.org/core. 26 Jul 2025 at 05:18:54, subject to the Cambridge Core terms of use.

Evaluation index

To evaluate the effectiveness of the model, RMSE and score function (*S*-score) are usually used for evaluation.

RMSE

RUL prediction is a typical regression problem, and RMSE is one of the most commonly used evaluation indexes in regression problems (Chen et al., 2019; Gao, 2020; Sayah et al., 2021), which is used to reflect the deviation between the actual value and the predicted value, as shown in Eq. (8):

$$RMSE = \sqrt{\frac{1}{N}\sum_{i=1}^{N}\left(RUL_{pre} - RUL_{actual}\right)^2}, \tag{8}$$

where N represents the total number of samples, RUL_{pre} represents the predicted RUL, and RUL_{actual} represents the actual RUL.

S-score

In the field of RUL prediction, many research papers use the score function as the evaluation index, and this evaluation indicator was also adopted by the 2008 International PHM Data Challenge (Li et al., 2018; Al-Dulaimi et al., 2020; Zheng et al., 2022). Compared with RMSE, the biggest feature of the score function is that it imposes more severe penalties for predicting values that are too large. This meets the requirements of practical engineering, as in important fields such as aerospace, predicting failure time later than the actual failure time may lead to incorrect maintenance decisions, resulting in very serious losses (Che et al., 2019; Li et al., 2020b). The mathematical expression (Eqs. (9) and (10)] of the score function is as follows:

$$S - score = \sum_{i=1}^{N} s_i, \tag{9}$$

$$s_i = \begin{cases} e^{-\frac{RUL_{pre}-RUL_{actual}}{13}} - 1, & RUL_{pre} - RUL_{actual} < 0, \\ e^{\frac{RUL_{pre}-RUL_{actual}}{10}} - 1, & RUL_{pre} - RUL_{actual} \geq 0, \end{cases} \tag{10}$$

where e represents the natural logarithm.

Method analysis

To further compare the application of deep learning methods in RUL prediction, Table 4 summarizes some deep learning methods validated on the C-MAPSS dataset in recent years and presents the experimental results of various methods on the first subset (FD001). Table 4 also provides a brief introduction to the used methods. Although various methods may not be consistent in data processing, the C-MAPSS dataset specifies the training and testing sets, so RUL prediction methods based on different deep learning could be compared on this publicly available dataset.

In Table 4, there are 11 deep learning methods applied to the C-MAPSS dataset in the past 3 years. It can be seen that all the deep learning methods mentioned in the "Deep learning-based RUL prediction methods" section have been applied to this dataset. Among them, CNN is mainly used for extracting spatial features,

Table 4. RUL prediction method based on deep learning and its performance on C-MAPSS (FD001)

Method	Author	Year	RMSE	*S*-score	Method introduction
LSTM	Gao Hui (Gao, 2020)	2020	13.45	–	LSTM extracts features and learns temporal dependencies, and finally inputs them into the fully connected network.
NPBGRU	Al-Dulaimi A (Al-Dulaimi et al., 2020)	2020	10.44	191.8	Applied the noise layers at the input of each path in the first two parallel paths (BiGRU and CNN).
1D-CNN + BiLSTM + AM	Zheng Y (Zheng et al., 2022)	2022	9.74	–	The dilated convolution increases the receptive field of the last layer and fused the 1D-CNN and BiLSTM.
LSTM + DBN	Li Jingfeng (Li et al., 2020b)	2020	12.43	172	LSTM performs time-series prediction on a single sensor, integrating the prediction results into DBN for health indicator extraction, and combining the health indicator prediction curve and failure threshold to obtain RUL prediction results.
AE + DBN	Al-Khazraji H (Al-Khazraji et al., 2022)	2022	11.27	219	AE for the feature extraction characteristic and DBN for superiority in learning long-range dependencies.
AE	XU Yu-hui (Yu-hui et al., n.d.)	2021	14.07	291.67	RUL prediction based on multi-time scale similarity of health indicators using AE.
GRU + AM	Yuan Y (Yuan et al., 2022)	2022	13.12	249.32	Feature attention mechanism extracts spatial correlation and GRU extracts temporal correlation.
FCN + AM	Fan L (Fan et al., 2022)	2022	13.99	336.45	Loss boundary to mapping ability approach for signal selection, FCN + AM for RUL prediction.
Transformer + AM	Chadha G S (Chadha et al., 2022)	2022	12.1	184	Transformer learns temporal dependencies, and AM increases the weights of important features.
CNN + Transformer	Jiangyan Z (Jiangyan et al., 2024)	2024	11.12	189.01	Parallel multi-scale CNN and Transformer module.
Transformer + Transfer learning	Li X (Li et al., 2022b)	2022	10.56	664	Domain adaptation for RUL prediction and a novel method by aligning distributions at both the feature level and the semantic level, FD003 → FD001.

Downloaded from https://www.cambridge.org/core. 26 Jul 2025 at 05:18:54, subject to the Cambridge Core terms of use.

RNN is mainly used for extracting temporal features, and DBN and AE are used for unsupervised feature dimensionality reduction. Also, it could be noted that adding AM to the deep learning model decreases the RMSE compared with those not added, because AM could help the model pay more attention to the important features which related to the RUL. Also, by combining the advantages of different methods, more in-depth feature expressions related to equipment degradation can be learned, thus improving the prediction accuracy, such as the hybrid single model, and the combination of AM and deep learning models. It is worth noting that the improvement of RUL prediction accuracy by various models in Table 4 is limited. We believe that a simple combination of multiple methods is not the key to improving prediction performance. How to flexibly utilize different methods for complementary advantages and thereby improve model prediction accuracy is a problem worth studying. In addition, more data generated in actual industrial production will also promote model validation and facilitate AI-driven production, where there will be more paper really concerning the challenging problems in practical scenarios.

Conclusions

Methods comparison

Some deep learning methods and techniques are discussed in the "Deep learning-based RUL prediction methods" and "Methods to solve challenging problems in RUL predictions" sections. Here, the pros and cons of different methods are clearly categorized in Table 5.

As can be seen in Table 5, different methods and techniques have their own advantages and disadvantages, and the appropriate method can be selected based on the actual scenario and the characteristics of the collected dataset. Different methods and techniques can also be combined to neutralize their drawbacks.

Table 5. Advantages and disadvantages of different methods and techniques

Methods		Advantages	Disadvantages
Supervised learning	RNN	Capture the temporal relationships of features; considering contextual information	Unable to capture spatial relationships of features; RUL label required.
	CNN	Capture the spatial relationships of features; weight sharing, saving computational costs, reducing the risk of overfitting	Unable to capture bidirectional temporal relationships of features; RUL label required.
Unsupervised learning	DBN AE	No RUL label required; feature dimensionality reduction	Need to calculate the distance between features; need to establish HI.
Attention mechanism		Focus attention on features related to lifespan degradation; better prediction effect	High computational complexity.
Transfer learning		Model transfer between multiple operating conditions and datasets	The transferability between working conditions and datasets cannot be uniformly quantified and measured. A complete RtF dataset as the original domain is still needed.
Semi-supervised learning		Fully utilize health data	Incomplete annotation of data may lead to poor predictive performance of the model.
Bayesian method		Consider errors in data, models, and calculations	The computational complexity is high and difficult to achieve accurately, so Monte Carlo approximate methods are generally used.
Digital twin		Real-time prediction, in line with actual scenarios	Currently, the implementation and application of digital twin frameworks are very difficult, which means difficulties in project implementation.

Prospect

The literature reviewed in the "Methods to solve challenging problems in RUL predictions" section has suggested corresponding solutions to address the difficult issues of RUL prediction for equipment components (few labeled samples, cross-condition, uncertainty, real-time, etc.) to some extent, but the optimization still needs to be iterated in future practical applications. Therefore, some highlights and challenges in the aforementioned solutions are provided below in order to improve RUL prediction outcomes and performance.

Few labeled samples and cross-condition problem

The following points need to be noted when using TL methods to solve few labeled samples and cross-working condition problems.

(1) All existing methods require that the source domain must contain all failure modes in the target domain (Xia et al., 2021; Xu et al., 2021b). Therefore, there is a significant restriction requirement on the dataset that serves as the source domain. Moreover, when the source domain cannot contain all the fault features of the target domain and cannot satisfy the transfer requirements, it is also necessary to consider the multi-source domain data.

(2) All existing methods are difficult to measure the transfer ability of the source and target domains. Currently, there is no accurate difference measure to determine whether the source and target domains are migratable from each other; therefore, it may lead to inaccurate migration of the two domains.

(3) Although TL methods have made great progress in RUL prediction under different working conditions, there is still some error between the prediction results and the true values, and the error may be caused by the imbalance of labeled and unlabeled

Downloaded from https://www.cambridge.org/core. 26 Jul 2025 at 05:18:54, subject to the Cambridge Core terms of use.

samples. Therefore, how to develop TL methods with less error is the future trend.

(4) The high number of model parameters involved in TL leads to high model computation costs. Therefore, future research will further explore model compression techniques to address this limitation. Also, how to achieve adaptive extraction of migratable features and maintain their corresponding interpretable physical meaning (Sanakkayala et al., 2022) is a question worthy of consideration.

Uncertainty

The RUL prediction uncertainty methods reviewed in this paper only consider deep learning networks that incorporate multiple Monte Carlo dropout inferences and do not incorporate a mixture of deep learning and filtering techniques. The following ideas are suggested in light of the aforementioned.

(1) Existing studies have addressed the interval prediction problem for RUL, but little research has been done on uncertainty quantification (Wei et al., 2022) and calibration (Thelen et al., 2022). Therefore, future models should consider more spatiotemporal dependencies while incorporating uncertainty quantification into physical and inferential causal models, thus expanding the applicability of the modeling framework.

(2) The distribution uncertainty of RUL is highly dependent on the single-point prediction results of multiple Monte Carlo inferences. Suboptimal single-value predictions will affect the accuracy of mechanical equipment maintenance strategy development. Therefore, future work will focus on reducing single-value prediction errors and improving prediction accuracy.

Real-time

The RUL prediction model based on the hybrid DT and deep learning, to some extent, satisfies the concept of real-time RUL prediction and practical industrial precise condition-based maintenance. Based on the shortcomings of the existing research and future development trends, the following points are proposed.

(1) Deep learning and other AI techniques are one of the underlying core technologies of the DT. The massive data processing and system optimization techniques, mainly embodied in the DT space, both require deep learning as the main central brain of the twin space for mechanical equipment fault diagnosis and RUL prediction (Agrawal et al., 2022). The combination of deep learning and DT is crucial to the current state of research, and future research will be devoted to the combination of the two to bring different degrees of intelligent transformation to various industries.

(2) DT-driven RUL prediction methods do help in the real-time maintenance of mechanical equipment, but sufficient data must be available for DT modeling. Therefore, in the future, it is necessary to balance the costs for data collection-storage and the benefits of the industry when building DT models for complex systems in the on-site application process.

In summary, as DT technology develops and becomes more sophisticated, mechanical equipment's fault self-diagnosis, RUL self-prediction, and remote operation and maintenance will eventually be merged with deep learning models to create a fully functional intelligent PHM whole process (Liu et al., 2021).

Integration and diversity

(1) Most of the literature treats RUL prediction of mechanical equipment as a single prediction task without considering the problem of fault diagnosis because fault diagnosis is a discrete task while RUL prediction is a continuous task. The usual practice is to train two deep learning models, one for fault diagnosis and one for RUL prediction, but this wastes more training time and computational resources, resulting in low efficiency in both diagnosis and prediction. Ruan et al. (2022) integrates fault diagnosis and RUL prediction into a single deep network, which improves efficiency as well as saves computing resources. Therefore, this ensemble and integrated framework will be the future research and application direction.

(2) The performance degradation of manufacturing components shows some dependence on the decline in product quality. However, the traditional RUL prediction and maintenance strategy of the manufacturing system are limited to the dependence on the manufacturing components' performance degradation. And most research only considers the impact of one component on equipment RUL. Han et al. (2021) proposed a system PdM method based on the component functional importance based on the RUL prediction model that considers the components dependence for product quality requirements.

(3) Compared with equipment failure data, the various effects and economic losses caused by equipment defects are more conducive to guide the development and optimization of maintenance strategies, which are rarely discussed. Li et al. (2022c) proposed a novel integrated PdM strategy to improve the performance of manufacturing systems from the perspective of product defect information.

In summary, the equipment RUL prediction will undoubtedly become more accurate with the continued development of intelligent digital services, and the mechanical equipment guarantee will undoubtedly realize condition-based maintenance. Real-time remote prediction, management, maintenance, and deployment to meet the actual industrial needs will also become a reality.

Summary

As the systems and component mechanisms of large-scale equipment become increasingly complex, RUL prediction models based on deep learning have been widely researched and applied by academia and industry with their strong model-fitting ability and not solely rely on expert experience. However, there is a lack of summary and comparison of relevant research work and results based on deep learning. Therefore, in order to master and further understand the RUL prediction methods and technology based on deep learning, this paper reviews the commonly used deep learning methods to predict the equipment components RUL, as well as the new techniques to address the real-world application issues, including DTs, TL techniques, and Bayesian techniques. Then, we mainly conducted the case study on the C-MAPSS dataset and compared different RUL prediction methods. Finally, we compare the pros and cons of different methods and discuss the difficulties and some future directions for the RUL prediction in practical scenarios.

Data availability statement. Data or material sharing is not applicable to this paper as no datasets were generated or analyzed during the current study.

Author contribution. All authors contributed to the methodology research and review. Common methodology research and analysis were performed by L.K., J.W., and Y.P. The Challenging problems research was performed by L.K. and S.K. The prospect part was performed by H.Z. and Y.Y. The first draft of the manuscript was written by L.K., Y.P., and S.K. All authors commented on previous versions of the manuscript. All authors read and approved the final manuscript.

Downloaded from https://www.cambridge.org/core. 26 Jul 2025 at 05:18:54, subject to the Cambridge Core terms of use.

Funding statement. This work was supported by the China National Natural Science Foundation (Grant No. U1933202) and the China Equipment Pre-Research Field Foundation (Grant No. MJ-2020-Y-011).

Competing interest. No author associated with this paper has disclosed any potential or pertinent conflicts that may be perceived to have an impending conflict with this work.

Ethical standard. Written informed consent for publication of this paper was obtained from the Institute of Computer Application, China Academy of Engineering Physics; College of Civil Aviation, Nanjing University of Aeronautics and Astronautics; and all authors.

References

Agrawal A, Fischer M and Singh V (2022) Digital twin: From concept to practice. Preprint, arXiv:2201.06912.

Alam KM and El Saddik A (2017) C2PS: A digital twin architecture reference model for the cloud-based cyber-physical systems. *IEEE Access* **5**, 2050–2062.

Al-Dulaimi A, Asif A and Mohammadi A (2020) Noisy parallel hybrid model of NBGRU and NCNN architectures for remaining useful life estimation. *Quality Engineering* **32**(3), 371–387.

Al-Khazraji H, Nasser AR, Hasan AM, Al Mhdawi AK, Al-Raweshidy H and Humaidi AJ (2022) Aircraft engines remaining useful life prediction based on a hybrid model of autoencoder and deep belief network. *IEEE Access* **10**, 82156–82163.

Angadi SV and Jackson RL (2022) A critical review on the solenoid valve reliability, performance and remaining useful life including its industrial applications. *Engineering Failure Analysis* **136**, 106231.

Anis MD, Taghipour S, Lee CG (2020) Optimal RUL estimation: A state-of-art digital twin application. In *2020 Annual Reliability and Maintainability Symposium (RAMS)*. IEEE, pp. 1–7.

Banerjee A, Gupta SK and Putcha C (2022) Comparative study of data-driven models in motor RUL estimation. *ASCE-ASME Journal of Risk and Uncertainty in Engineering Systems, Part A: Civil Engineering* **8**(1), 04021067.

Biggio L, Wieland A, Chao MA, Kastanis I and Fink O (2021) Uncertainty-aware remaining useful life predictor. Preprint, arXiv:2104.03613.

Blei DM, Kucukelbir A and McAuliffe JD (2017) Variational inference: A review for statisticians. *Journal of the American Statistical Association* **112**(518), 859–877.

Bousmalis K, Trigeorgis G, Silberman N, Krishnan D and Erhan D (2016) Domain separation networks. *Advances in Neural Information Processing Systems*, 29.

Buntine W and Hutter M (2010) A Bayesian view of the Poisson–Dirichlet process. Preprint, arXiv:1007.0296.

Cao Y, Jia M, Ding P and Y Ding (2021) Transfer learning for remaining useful life prediction of multi-conditions bearings based on bidirectional-GRU network. *Measurement* **178**, 109287.

Chadha GS, Shah SRB, Schwung A and Ding SX (2022) Shared temporal attention transformer for remaining useful lifetime estimation. *IEEE Access* **10**, 74244–74258.

Chang WY and Hsu BY (2023) Tool life prediction via SMB-enabled monitor based on BPNN coupling algorithms for sustainable manufacturing. *AI EDAM* **37**, e20.

Che C, Wang H, Fu Q and X Ni (2019) Combining multiple deep learning algorithms for prognostic and health management of aircraft. *Aerospace Science and Technology* **94**, 105423.

Chen C, Shi J, Lu N, Zhu ZH and Jiang B (2022) Data-driven predictive maintenance strategy considering the uncertainty in remaining useful life prediction. *Neurocomputing* **494**, 79–88.

Chen D, Qin Y, Wang Y and Zhou J (2021) Health indicator construction by quadratic function-based deep convolutional auto-encoder and its application into bearing RUL prediction. *ISA Transactions* **114**, 44–56.

Chen J, Jing H, Chang Y and Liu Q (2019) Gated recurrent unit based recurrent neural network for remaining useful life prediction of nonlinear deterioration process. *Reliability Engineering & System Safety* **185**, 372–382.

Cheng H, Kong X, Wang Q, Ma H and Yang S (2022) The two-stage RUL prediction across operation conditions using deep transfer learning and insufficient degradation data. *Reliability Engineering & System Safety* **225**, 108581.

Ding Y, Ding P, Zhao X, Cao Y and Jia M (2022) *Transfer learning for remaining useful life prediction across operating conditions based on multi-source domain adaptation. In IEEE/ASME Transactions on Mechatronics.*

Du Z, Li J, Su H, Zhu L and Lu K (2021) Cross-domain gradient discrepancy minimization for unsupervised domain adaptation. In *Proceedings of the IEEE/CVF Conference on Computer Vision and Pattern Recognition*, pp. 3937–3946.

Ellefsen AL, Bjørlykhaug E, Æsøy V, Ushakov S and Zhang H (2019) Remaining useful life predictions for turbofan engine degradation using semi-supervised deep architecture. *Reliability Engineering & System Safety* **183**, 240–251.

Fan L, Chai Y and Chen X (2022) Trend attention fully convolutional network for remaining useful life estimation. *Reliability Engineering & System Safety*, 108590.

Fei T, He Z, Qinglin Q (2020) Ten questions towards digital twin: Analysis and thinking. *Computer Integrated Manufacturing Systems* **26**(1), 1–17.

Ferreira C and Gonçalves G (2022) Remaining useful life prediction and challenges: A literature review on the use of machine learning methods. *Journal of Manufacturing Systems* **63**, 550–562.

Fu B (2021) *Research and Application of Remaining Useful Life Prediction Model of Industrial Equipment Components Based on Transfer Learning (in Chinese)*. Beijing University of Posts and Telecommunications.

Gal Y, Ghahramani Z (2016) Dropout as a Bayesian approximation: Representing model uncertainty in deep learning. In *International Conference on Machine Learning*, New York, NY, USA, pp. 1050–1059.

Ganin Y and Ustinova E and Ajakan H (2016) Domain-adversarial training of neural networks. *The Journal of Machine Learning Research* **17**(1), 2096–2030.

Gao H (2020) Research on remaining useful life prediction method of mechanical equipment (in Chinese). Shandong University.

Ge MF, Liu Y, Jiang X and Lu J (2021) A review on state of health estimations and remaining useful life prognostics of lithium-ion batteries. *Measurement* **174**, 109057.

Ghifary M, Kleijn WB, Zhang M, Balduzzi D and Li W (2016) Deep reconstruction-classification networks for unsupervised domain adaptation. In *European Conference on Computer Vision*. Cham: Springer, pp. 597–613.

Guo J, Yang Z, Chen C, Luo W and Hu W (2021) Real-time prediction of remaining useful life and preventive maintenance strategy based on digital twin. *Journal of Computing and Information Science in Engineering* **21**(3), 031003.

Guo L, Li N, Jia F, Lei Y and Lin J (2017) A recurrent neural network based health indicator for remaining useful life prediction of bearings. *Neurocomputing* **240**, 98–109.

Han X, Wang Z, Xie M, He Y, Li Y and Wang W (2021) Remaining useful life prediction and predictive maintenance strategies for multi-state manufacturing systems considering functional dependence. *Reliability Engineering & System Safety* **210**, 107560.

He R, Tian Z and Zuo MJ (2022a) A semi-supervised GAN method for RUL prediction using failure and suspension histories. *Mechanical Systems and Signal Processing* **168**, 108657.

He X, Ai Q, Wang J, Tao F, Pan B, Qiu R and Yang B (2022b) Situation awareness of energy internet of thing in Smart City based on digital twin: From digitization to informatization. *IEEE Internet of Things Journal* **10**, 7439–7458.

Hinton GE and Salakhutdinov RR (2006) Reducing the dimensionality of data with neural networks. *Science* **313**(5786), 504–507.

Hollenbeck D and Chen YQ (2022) A digital twin framework for environmental sensing with suas. *Journal of Intelligent & Robotic Systems* **105**(1), 1–15.

Hong CW, Ko MS, Hur K (2021) ConvNet-based remaining useful life prognosis of a turbofan engine. In *2021 IEEE 4th International Conference on Knowledge Innovation and Invention (ICKII)*. Piscataway, New Jersey, USA: IEEE, pp. 190–193.

Hu CH, Pei H, Si XS, Du DB, Pang Zn and Wang X (2019) A prognostic model based on DBN and diffusion process for degrading bearing. *IEEE Transactions on Industrial Electronics* **67**(10), 8767–8777.

Downloaded from https://www.cambridge.org/core. 26 Jul 2025 at 05:18:54, subject to the Cambridge Core terms of use.

Jiangyan Z, Ma J and Wu J (2024) A regularized constrained two-stream convolution augmented transformer for aircraft engine remaining useful life prediction. *Engineering Applications of Artificial Intelligence* **133**, 108161.

Krokotsch T, Knaak M and Ghümann C (2022) Improving Semi-Supervised Learning for Remaining Useful Lifetime Estimation Through Self-Supervision [J]. *International Journal of Prognostics and Health Management* **13**(1), 19.

Lee DH (2013) Pseudo-label: The simple and efficient semi-supervised learning method for deep neural networks. In *Workshop on Challenges in Representation Learning*. Vol. **3**(2). ICML, p. 896.

Lei YG, Li NP, Guo L, Li NB, Yan T and Lin J (2018) Machinery health prognostics: A systematic review from data acquisition to RUL prediction. *Mechanical Systems and Signal Processing* **104**, 799–834.

Li J, Chen E, Ding Z, Zhu L, Lu K and Shen HT (2020a) Maximum density divergence for domain adaptation. *IEEE Transactions on Pattern Analysis and Machine Intelligence* **43**(11), 3918–3930.

Li JF, Chen YX, Xiang HC and Cai ZY (2021) Divergence-agnostic unsupervised domain adaptation by adversarial attacks. *IEEE Transactions on Pattern Analysis and Machine Intelligence* **44**, 8196–8211.

Li JF, Chen YX, Xiang HC (2020b) Remaining useful life prediction for aircraft engine based on LSTM-DBN (in Chinese). *Systems Engineering and Electronics* **42**(7), 1637–1644.

Li L, Lei B and Mao C (2022a) Digital twin in smart manufacturing. *Journal of Industrial Information Integration* **26**, 100289.

Li N, Lei Y, Li X, Liu X and Yang B (2023a) A new nonparametric degradation modeling method for truncated degradation signals by axis rotation. *Mechanical Systems and Signal Processing* **192**, 110213.

Li X, Ding Q and Sun JQ (2018) Remaining useful life estimation in prognostics using deep convolution neural networks. *Reliability Engineering & System Safety* **172**, 1–11.

Li X, Li J, Zuo L, Zhu L and Shen HT (2022b) Domain adaptive remaining useful life prediction with transformer. *IEEE Transactions on Instrumentation and Measurement* **71**, 1–13.

Li X, Zhang W, Li X and Hao H (2023b) *Partial domain adaptation in remaining useful life prediction with incomplete target data. In IEEE/ASME Transactions on Mechatronics.*

Li Y, He Y, Liao R, Zheng X and Dai W (2022c) Integrated predictive maintenance approach for multistate manufacturing system considering geometric and non-geometric defects of products. *Reliability Engineering & System Safety* **228**, 108793.

Liang H, Yuan P and Gao Y Remaining useful life prediction of lithium-ion battery based on CNN-bi-LSTM network (in Chinese). *Electric Power Automation Equipment,2021* **41**(10), 213–219.

Liao L, Jin W and Pavel R (2016) Enhanced restricted Boltzmann machine with prognosability regularization for prognostics and health assessment. *IEEE Transactions on Industrial Electronics* **63**(11), 7076–7083.

Lin YH and Li GH (2022) A Bayesian deep learning framework for RUL prediction incorporating uncertainty quantification and calibration. *IEEE Transactions on Industrial Informatics* **18**, 7274–7284.

Liu C, Cichon A, Królczyk G and Li Z (2021) Technology development and commercial applications of industrial fault diagnosis system: A review. *The International Journal of Advanced Manufacturing Technology*, 1–33.

Lu BL, Liu ZH, Wei HL, Chen L, Zhang H and Li XH (2021) A deep adversarial learning prognostics model for remaining useful life prediction of rolling bearing. *IEEE Transactions on Artificial Intelligence* **2**(4), 329–340.

Lv Z and Xie S (2021) Artificial intelligence in the digital twins: State of the art, challenges, and future research topics. *Digital Twin* **1**(12), 12.

Ma M and Mao Z (2020) Deep-convolution-based LSTM network for remaining useful life prediction. *IEEE Transactions on Industrial Informatics* **17**(3), 1658–1667.

Man J, Zheng M, Liu Y, Shen Y and Li Q (2022) Bearing remaining useful life prediction based on AdCNN and CWGAN under few samples. *Shock and Vibration* **2022**, 1709071.

Mnih V, Heess N and Graves A (2014) Recurrent models of visual attention. In *Advances in Neural Information Processing Systems*, San Diego, California: Curran Associates. pp. 2204–2212.

Nguyen TK, Ahmad Z and Kim JM (2022) A deep-learning-based health indicator constructor using Kullback–Leibler divergence for predicting the remaining useful life of concrete structures. *Sensors* **22**(10), 3687.

Nieves Avendano D, Vandermoortele N, Soete C, Moens P, Ompusunggu AP, Deschrijver D and Van Hoecke S (2022) A semi-supervised approach with monotonic constraints for improved remaining useful life estimation. *Sensors* **22**(4), 1590.

Ochella S, Shafiee M and Dinmohammadi F (2022) Artificial intelligence in prognostics and health management of engineering systems. *Engineering Applications of Artificial Intelligence* **108**, 104552.

Pan T, Chen J, Ye Z and Li A (2022) A multi-head attention network with adaptive meta-transfer learning for RUL prediction of rocket engines. *Reliability Engineering & System Safety*, 108610.

Peng K, Jiao R, Dong J and Pi Y (2019) A deep belief network based health indicator construction and remaining useful life prediction using improved particle filter. *Neurocomputing* **361**, 19–28.

Ranasinghe K, Sabatini R, Gardi A, Bijjahalli S, Kapoor R, Fahey T and Thangavel K (2022) Advances in integrated system health management for mission-essential and safety-critical aerospace applications. *Progress in Aerospace Sciences* **128**, 100758.

Rauf H, Khalid M and Arshad N (2022) Machine learning in state of health and remaining useful life estimation: Theoretical and technological development in battery degradation modelling. *Renewable and Sustainable Energy Reviews* **156**, 111903.

Remadna I, Terrissa LS, Al Masry Z and Zerhouni N (2022) RUL prediction using a fusion of attention-based convolutional variational AutoEncoder and ensemble learning classifier. *IEEE Transactions on Reliability*.

Rezamand M, Kordestani M, Carriveau R, Ting DSK, Orchard ME and Saif M (2020) Critical wind turbine components prognostics: A comprehensive review. *IEEE Transactions on Instrumentation and Measurement* **69**(12), 9306–9328.

Ruan D, Wu Y, Yan J and Gühmann C (2022) Fuzzy-membership-based framework for task transfer learning between fault diagnosis and RUL prediction. *IEEE Transactions on Reliability* **72**(3), 989–1002.

Rumelhart DE, Hinton GE and Williams RJ (1986) Learning representations by back-propagating errors. *Nature* **323**(6088), 533–536. 10.1038/323533a0.

Sanakkayala DC, Varadarajan V, Kumar N, Karan, Soni G, Kamat P, Kumar S, Patil S and Kotecha K (2022) Explainable AI for bearing fault prognosis using deep learning techniques. *Micromachines* **13**(9), 1471.

Saxena A and Goebel K (2008) Turbofan engine degradation simulation dataset. NASA Prognostics Data Repository, NASA Ames Research Center, Moffett Field, CA.

Sayah M, Guebli D, Al Masry Z and Zerhouni N (2021) Robustness testing framework for RUL prediction deep LSTM networks. *ISA Transactions* **113**, 28–38.

Tao F, Zhang H, Liu A and Nee AYC (2018a) Digital twin in industry: State-of-the-art. *IEEE Transactions on Industrial Informatics* **15**(4), 2405–2415.

Tao F, Zhang M, Liu Y and Nee AYC (2018b) Digital twin driven prognostics and health management for complex equipment. *CIRP Annals* **67**(1), 169–172.

Tao F, Zhang Y, Cheng Y, Ren J, Wang D, Qi Q and Li P (2020) Digital twin and blockchain enhanced smart manufacturing service collaboration and management. *Journal of Manufacturing Systems* **62**, 903–914.

Thelen A, Li M, Hu C, Bekyarova E, Kalinin S and Sanghadasa M (2022) Augmented model-based framework for battery remaining useful life prediction. *Applied Energy* **324**, 119624.

Vassiliev A, Samarin V, Raskin D, Evseev E, Veris V and Peschinski I (2019) Designing the built-in microcontroller control systems of executive robotic devices using the digital twins technology. In *2019 International Conference on Information Management and Technology (ICIMTech)*. Vol. **1**. Piscataway, New Jersey, USA: IEEE, pp. 256–260.

Vaswani A, Shazeer N, Parmar N, Uszkoreit J, Jones L, Gomez AN, Kaiser Ł and Polosukhin I. Attention is all you need[A]. In *NIPS'17: Proceedings of the 31st Conference on Neural Information Processing Systems*, Long Beach, CA, USA.

Wang FK, Amogne ZE, Chou JH and Tseng C (2022a) Online remaining useful life prediction of lithium-ion batteries using bidirectional long short-term memory with attention mechanism. *Energy*, 124344.

Wang Y, Tian J, Sun Z, Wang L, Xu R, Li M and Chen Z (2020) A comprehensive review of battery modeling and state estimation approaches for advanced battery management systems. *Renewable and Sustainable Energy Reviews* **131**, 110015.

Downloaded from https://www.cambridge.org/core. 26 Jul 2025 at 05:18:54, subject to the Cambridge Core terms of use.

Wang Y, **Zhang H and Wang X** (2022b) Hybrid 1DCNN-LSTM model for predicting lithium-ion battery state of health (in Chinese). *Energy Storage Science and Technology* **11**(1), 240–245.

Wei M, **Ye M**, **Wang Q**, **Lian G and Xu X** (2022) A data-driven approach with error compensation and uncertainty quantification for remaining useful life prediction of lithium-ion battery. *International Journal of Energy Research*, **46**(14), 20121–20135.

Wu J, **Kong L**, **Cheng Z**, **Yang Y and Zuo H** (2022a) RUL prediction for lithium batteries using a novel ensemble learning method. *Energy Reports* **8**, 313–326.

Wu J, **Kong L**, **Yi M**, **Chen Q**, **Cheng Z**, **Zuo H and Yang Y** (2022b) Prediction and screening model for products based on fusion regression and XGBoost classification. *Computational Intelligence and Neuroscience* **2022**, 4987639.

Wu J, **Liu H**, **Zuo H**, **Cheng Z**, **Yang Y**, **Ma Y and Kong L** (2021a) The demand supply steady-state process-based multi-level spare parts optimization. *Sensors* **21**(24), 8324.

Wu J, **Liu H**, **Zuo H**, **Cheng Z**, **Yang Y**, **Ma Y and Kong L** (2021b) Degradation-aware remaining useful life prediction with LSTM autoencoder. *IEEE Transactions on Instrumentation and Measurement* **70**, 1–10.

Wu Z and Li J (2021) A framework of dynamic data driven digital twin for complex engineering products: The example of aircraft engine health management. *Procedia Manufacturing* **55**, 139–146.

Xia P, **Huang Y**, **Li P**, **Liu C and Shi L** (2021) Fault knowledge transfer assisted ensemble method for remaining useful life prediction. *IEEE Transactions on Industrial Informatics* **18**(3), 1758–1769.

Xiong M, **Wang H**, **Fu Q and Xu Y** (2021) Digital twin–driven aero-engine intelligent predictive maintenance. *The International Journal of Advanced Manufacturing Technology* **114**(11), 3751–3761.

Xu G, **Hou D**, **Qi H and Bo L** (2021a) High-speed train wheel set bearing fault diagnosis and prognostics: A new prognostic model based on extendable useful life. *Mechanical Systems and Signal Processing* **146**, 107050.

Xu Q, **Chen Z**, **Wu K**, **Wang C**, **Wu M and Li X** (2021b) KDnet-RUL: A knowledge distillation framework to compress deep neural networks for machine remaining useful life prediction. *IEEE Transactions on Industrial Electronics* **69**(2), 2022–2032.

Xu Z, **Guo Y and Saleh JH** (2021c) Accurate remaining useful life prediction with uncertainty quantification: A deep learning and nonstationary gaussian process approach. *IEEE Transactions on Reliability* **71**(1), 443–456.

Yin Z, **Hu N**, **Chen J**, **Yang Y and Shen G**. (2022) A review of fault diagnosis, prognosis and health management for aircraft electromechanical actuators. *IET Electric Power Applications* **16**(11), 1249–1272.

Yu Y, **Hu C**, **Si X**, **Zheng J and Zhang J** (2020) Averaged bi-LSTM networks for RUL prognostics with non-life-cycle labeled dataset. *Neurocomputing* **402**, 134–147.

Yuan Y, **Huang H and Cheng C**. (2022) Remaining useful life prediction of the aircraft engine based on the GRU-GAN network with a feature attention mechanism (in Chinese). *Sci Sin Tech* **52**, 198–212. 10.1360/SST-2021-0434.

Yu-hui XU, **Jun-qing SHU**, **Ya SONG**, **Yu ZHENG and Tang-bin XIA** Remaining useful life prediction of turbofan engine based on similarity in multiple time scales (in Chinese). *Journal of Zhejiang University(Engineering Science),2021* **55**(10), 1937–1947.

Zeng F, **Li Y**, **Jiang Y and Song G** (2021) An online transfer learning-based remaining useful life prediction method of ball bearings. *Measurement* **176**, 109201.

Zhang Y, **Tang X**, **Zhang X** (2022) Remaining useful life predictions for turbofan engine using semi-supervised DBN-LSTM joint training model. In *2022 8th International Conference on Control, Decision and Information Technologies (CoDIT)*. Vol. **1**. Piscataway, New Jersey, USA: IEEE, pp. 94–99.

Zhao M, **Zhong S**, **Fu X**, **Tang B and Pecht M** (2020) Deep residual shrinkage networks for fault diagnosis. *IEEE Transactions on Industrial Informatics* **PP**(99), 1–1.

Zhao Y, **He Y**, **Zhou D**, **Zhang A**, **Han X**, **Li Y and Wang W** (2021) Functional risk-oriented integrated preventive maintenance considering product quality loss for multistate manufacturing systems. *International Journal of Production Research* **59**(4), 1003–1020.

Zheng Y, **Bao X**, **Zhao F**, **Chen C**, **Liu Y**, **Sun B and Wang H** (2022) Prediction of remaining useful life using fused deep learning models: A case study of turbofan engines. *Journal of Computing and Information Science in Engineering* **22**(5), 054501.

Zhu R, **Chen Y**, **Peng W and Ye ZS** (2022) Bayesian deep-learning for RUL prediction: An active learning perspective. *Reliability Engineering & System Safety* **228**, 108758.

Downloaded from https://www.cambridge.org/core. 26 Jul 2025 at 05:18:54, subject to the Cambridge Core terms of use.